Santorini

Italian made

All dimensions in mm

ST-WH1564 OF

White Double Bowl Topmount Sink

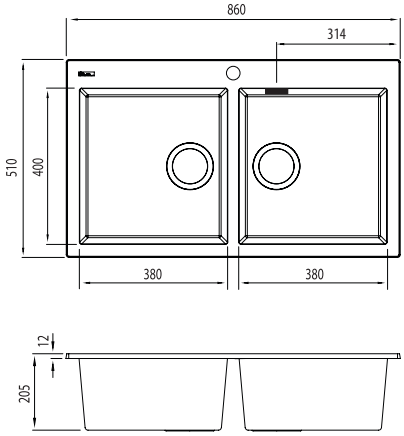

Overflow location

Specifications /

Sink size	860W x 510H mm
Bowl size	Standard Bowl 1 380W x 400H x 210D / 32L
	Standard Bowl 1 380W x 400H x 210D / 32L
Construction	Moulded granite
Material	80% granite and quartz particles and 20% acrylic
Installation	Topmount
Fixings	Topmount clips supplied
Min cabinet size	900 mm
Tap holes	1 tap hole only
Waste fittings	2 x 90 mm basket wastes included
Overflow	Overflow kit included
Carton size	960 x 580 x 310 mm
Weight	16 kg
Warranty	Lifetime manufacturer's warranty (refer to Oliveri website)
Maintenance and care instructions	Clean the sink regularly with warm water, a liquid detergent and a soft cloth. Do not use abrasive powders or creams and avoid chemically aggressive detergents. Generic stains should be removed immediately with very hot water and a cleaning product. For organic stains which are especially difficult to remove, it is recommended that you fill the sink with a highly diluted organic cleaner such as bleach and let stand overnight. The next morning, rinse with warm water and a soft cloth.

Included accessories /

AC11
Basket Wastes with Rectangular Overflow

For more information call 08 8348 6444 or visit oliveri.com.au

® Registered trademark of Oliveri Solutions. Under its policy of ongoing product development Oliveri Solutions may from time to time change product specification without notice. All dimensions given are approximate and should be checked prior to installation. See Oliveri website for installation and warranty details.

Revision date: 21/07/2025